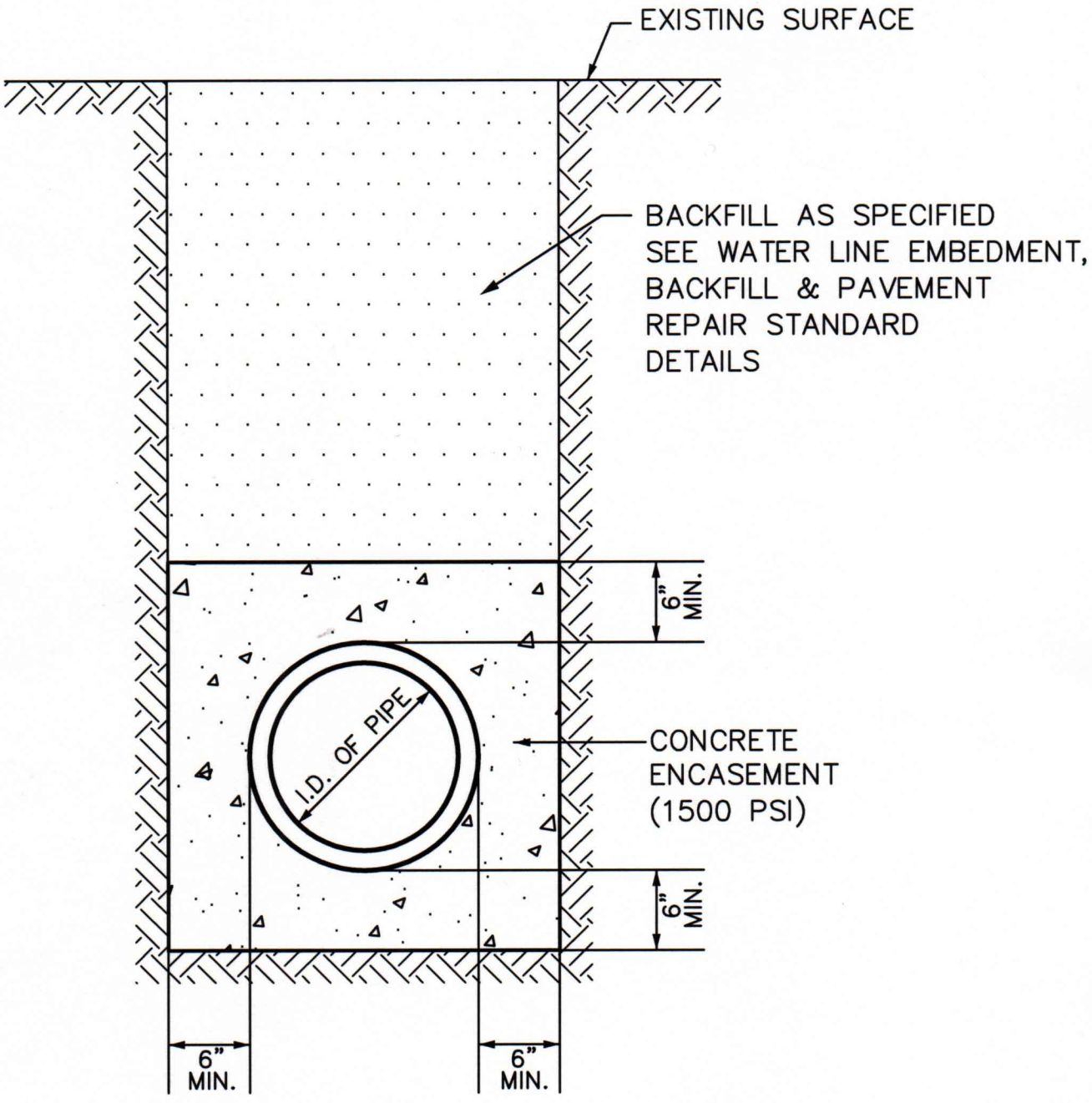

CITY OF DECATUR	WATER SYSTEM CONSTRUCTION DETAILS **CONCRETE ENCASEMENT**	REVISED OCT 2001 SCALE: N.T.S. SHEET: **W–15**